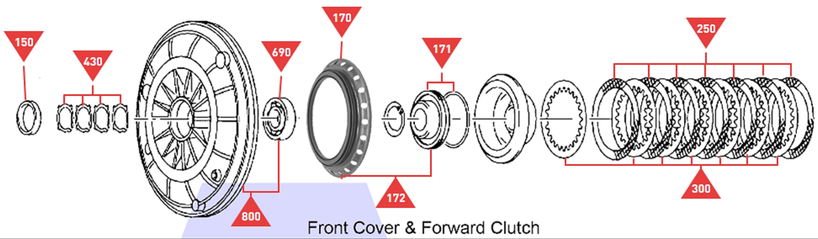

Front Cover & Forward Clutch

B

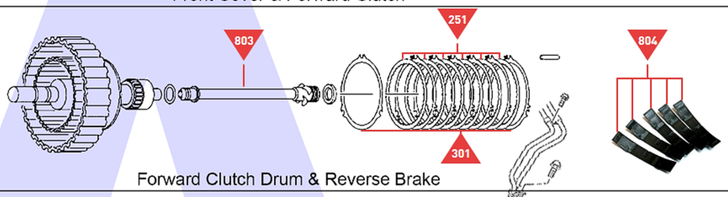

Forward Clutch Drum & Reverse Brake

C

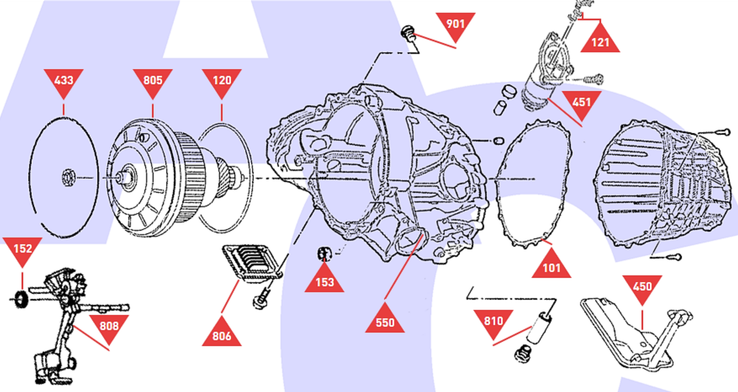

Main Case, Clutch Assembly, Filters Etc.

D

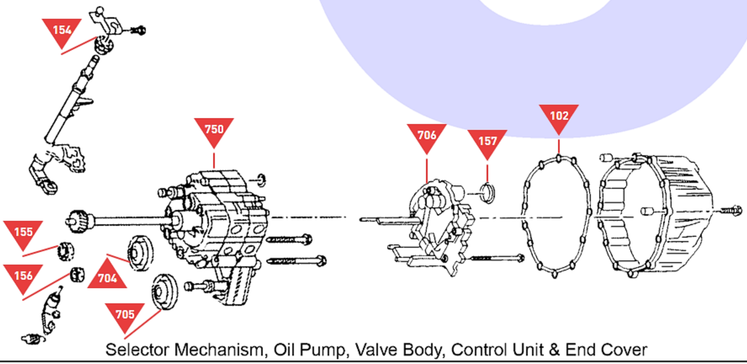

Selector Mechanism, Oil Pump, Valve Body, Control Unit & End Cover

E

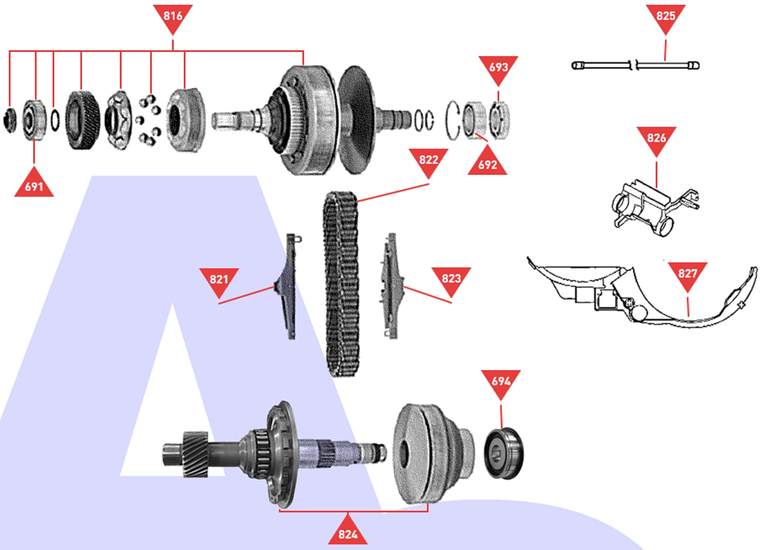

Pulley and Drive Chain Assembly

F

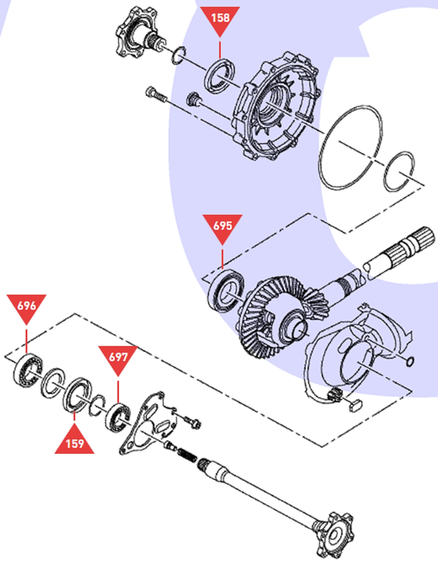

Differential Assembly